EC 45 flat brushless, 30 watt, with integrated electronics

4-Q-Speed Controller

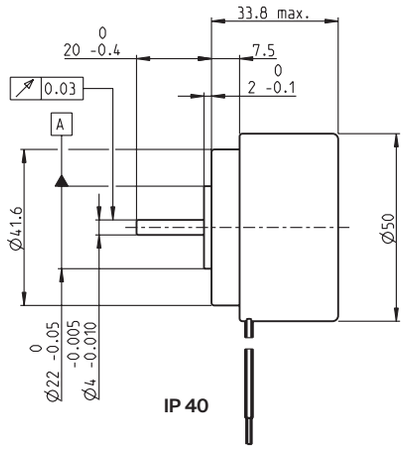

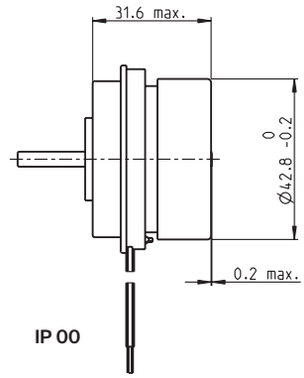

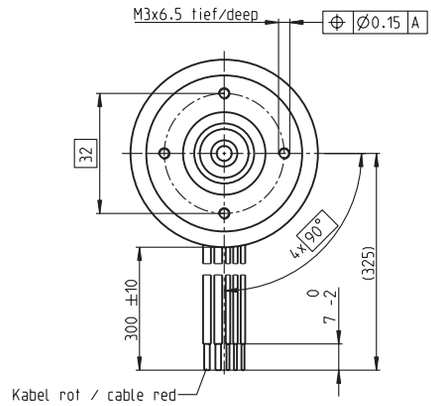

M 1:2

Stock program
Standard program
Special program (on request)

	Part Numbers			
	5 wire version			
	Enable		Direction	
IP 40 (with cover)	688721		688722	
IP 00 (without cover)		688725		688726
Motor Data (provisional)				
Values at nominal voltage				
1 Nominal voltage V	24	24	24	24
2 No load speed rpm	6000	6000	6000	6000
3 No load current mA	210	210	210	210
4 Nominal speed rpm	6000	6000	6000	6000
5 Nominal torque (max. continuous torque) mNm	59.4	89.6	59.4	89.6
6 Nominal current (max. continuous current) A	2.06	3.1	2.06	3.1
33 Max. torque mNm	104	104	104	104
34 Max. current A	3.62	3.62	3.62	3.62
9 Max. efficiency %	76	76	76	76
Characteristics				
35 Type of control	Speed	Speed	Speed	Speed
36 Supply voltage $+V_{CC}$ V	10...28	10...28	10...28	10...28
37 Speed set value input V	0.33...10.8	0.33...10.8	0.33...10.8	0.33...10.8
38 Scale speed set value input rpm/V	600	600	600	600
39 Speed range rpm	200...6480	200...6480	200...6480	200...6480
40 Max. acceleration rpm/s	6000	6000	6000	6000

Specifications

Thermal data

17	Thermal resistance housing-ambient	5.6 (3.12) K/W
18	Thermal resistance winding-housing	7.7 (4.5) K/W
19	Thermal time constant winding	37.6 (22) s
20	Thermal time constant motor	633 (353) s
21	Ambient temperature	-40...+85°C
22	Max. winding temperature	+125°C
41	Max. temperature of electronics	+105°C

Mechanical data (preloaded ball bearings)

16	Rotor inertia	135 gcm²
24	Axial play at axial load < 7.0 N	0 mm
	> 7.0 N	0.14 mm
25	Radial play	preloaded
26	Max. axial load (dynamic)	6.8 N
27	Max. force for press fits (static)	95 N
	(static, shaft supported)	1000 N
28	Max. radial load, 5 mm from flange	55 N

Other specifications

31	Weight of motor	226 g
32	Direction of rotation	Clockwise (CW)

Values listed in the table are nominal.

Protective functions
Overload protection, blockage protection, inverse-polarity protection, thermal overload protection, low/high voltage cut-off

Connection 5 wire version (Cable AWG 18/24)

red	$+V_{CC}$ 10...28 VDC
black	GND
white	Speed set value input
green	Monitor n (6 pulses per revolution)
grey	Disable (Type Enable) or sense of direction (Type Direction)

Operating Range

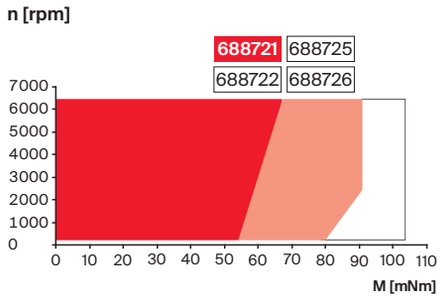

Comments

Continuous operation
The drive can be operated with a speed controller and, taking account of the given thermal resistance (fig. 17 and 18) at an ambient temperature of 25°C, does not exceed the maximum permissible operating temperatures.

Overload range
The drive reaches these operating points. Speed may vary from the set value. The overload protection shuts down the drive in the event of sustained overload.

maxon Modular System

Details on catalog page 46

Planetary Gearhead
Ø32 mm
0.75 - 6.0 Nm
Page 394/398

Planetary Gearhead
Ø42 mm
3.0 - 15.0 Nm
Page 407
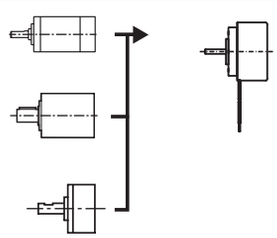
Spur Gearhead
Ø45 mm
0.5 - 2.0 Nm
Page 409