EC 60 flat ∅60 mm, brushless, 100 watt

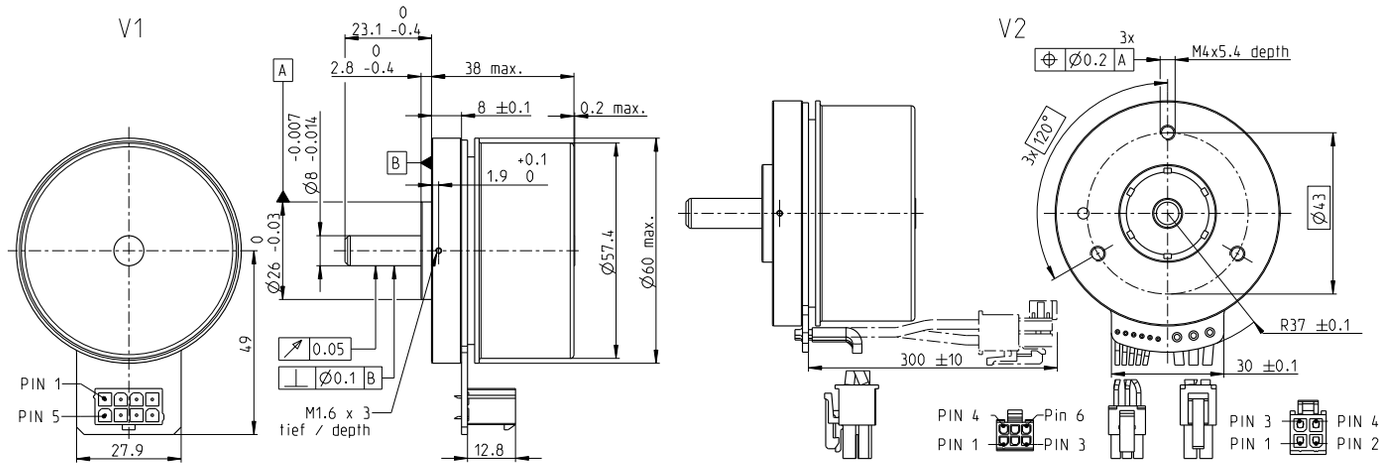

M 1:2

Stock program
Standard program
Special program (on request)

Part Numbers			
V1 with Hall sensors	625854	**625855**	625856
V2 with Hall sensors and cables	647691	645604	647692

Motor Data				
Values at nominal voltage				
1 Nominal voltage	V	12	24	48
2 No load speed	rpm	3760	4300	4020
3 No load current	mA	797	493	221
4 Nominal speed	rpm	3210	3730	3460
5 Nominal torque (max. continuous torque)	mNm	261	269	298
6 Nominal current (max. continuous current)	A	8.72	5.14	2.61
7 Stall torque[1]	mNm	3340	4300	4870
8 Stall current	A	111	81.9	43.2
9 Max. efficiency	%	84.1	85.3	86.4
Characteristics				
10 Terminal resistance phase to phase	Ω	0.108	0.293	1.11
11 Terminal inductance phase to phase	mH	0.0911	0.279	1.28
12 Torque constant	mNm/A	30	52.5	113
13 Speed constant	rpm/V	318	182	84.8
14 Speed/torque gradient	rpm/mNm	1.14	1.01	0.837
15 Mechanical time constant	ms	9.99	8.86	7.32
16 Rotor inertia	gcm²	835	835	835

Specifications

Thermal data		
17 Thermal resistance housing-ambient		2.5 K/W
18 Thermal resistance winding-housing		3.8 K/W
19 Thermal time constant winding		41.4 s
20 Thermal time constant motor		90 s
21 Ambient temperature		-40...+100°C
22 Max. winding temperature		+125°C
Mechanical data (preloaded ball bearings)		
23 Max. speed		6000 rpm
24 Axial play at axial load	< 12.0 N	0 mm
	> 12.0 N	0.14 mm
25 Radial play		preloaded
26 Max. axial load (dynamic)		12 N
27 Max. force for press fits (static)		170 N
(static, shaft supported)		8000 N
28 Max. radial load, 5 mm from flange		112 N
Other specifications		
29 Number of pole pairs		7
30 Number of phases		3
31 Weight of motor		355 g

Values listed in the table are nominal.

Connection V1		**V2** (sensors, AWG 24)
Pin 1	Hall sensor1	Hall sensor1
Pin 2	Hall sensor 2	Hall sensor 2
Pin 3	V_{Hall} 4.5...24 VDC	Hall sensor 3
Pin 4	Motor winding 3	GND
Pin 5	Hall sensor 3	V_{Hall} 4.5...24 VDC
Pin 6	GND	N.C.
Pin 7	Motor winding 1	
Pin 8	Motor winding 2	
		V2 (Motor, AWG 16)
Pin 1		Motor winding 1
Pin 2		Motor winding 2
Pin 3		Motor winding 3
Pin 4		N.C.

Wiring diagram for Hall sensors see p. 59

Connector		**Part number**
Molex	46015-0806	43025-0600
Molex		39-01-2040

Connection cable for V1

Universal, L = 500 mm	**339380**
zu EPOS4, L = 500 mm	**354045**

[1]Calculation does not include saturation effect (p. 71/178)

Operating Range

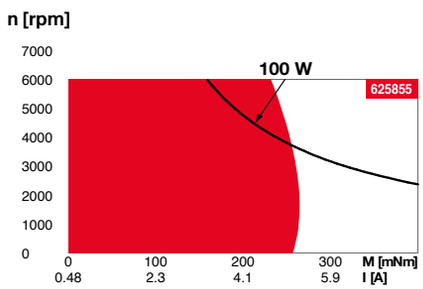

Comments

Continuous operation
In observation of above listed thermal resistance (lines 17 and 18) the maximum permissible winding temperature will be reached during continuous operation at 25°C ambient.
= Thermal limit.

Short term operation
The motor may be briefly overloaded (recurring).

Assigned power rating

maxon Modular System

Details on catalog page 46

Planetary Gearhead
∅52 mm
4-30 Nm
Page 411

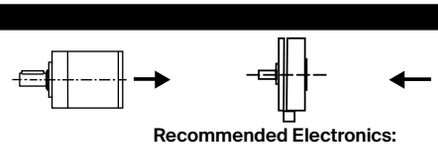

Encoder MILE
512-4096 CPT,
2 channels
Page 462

Recommended Electronics:

Notes	Page **46**
ESCON Module 50/5	501
ESCON Mod. 50/8 (HE)	502
ESCON 50/5	503
ESCON 70/10	503
DEC Module 50/5	505
EPOS4 Mod./Comp. 50/5	510
EPOS4 Mod./Comp. 50/8	511
EPOS4 Mod./Comp. 50/15	514
EPOS4 50/5	515
EPOS4 70/15	515
EPOS4 Disk 60/8	516
EPOS4 Disk 60/12	517
EPOS2 P 24/5	520