EC 60 flat ∅60 mm, brushless, 150 watt

Open Rotor

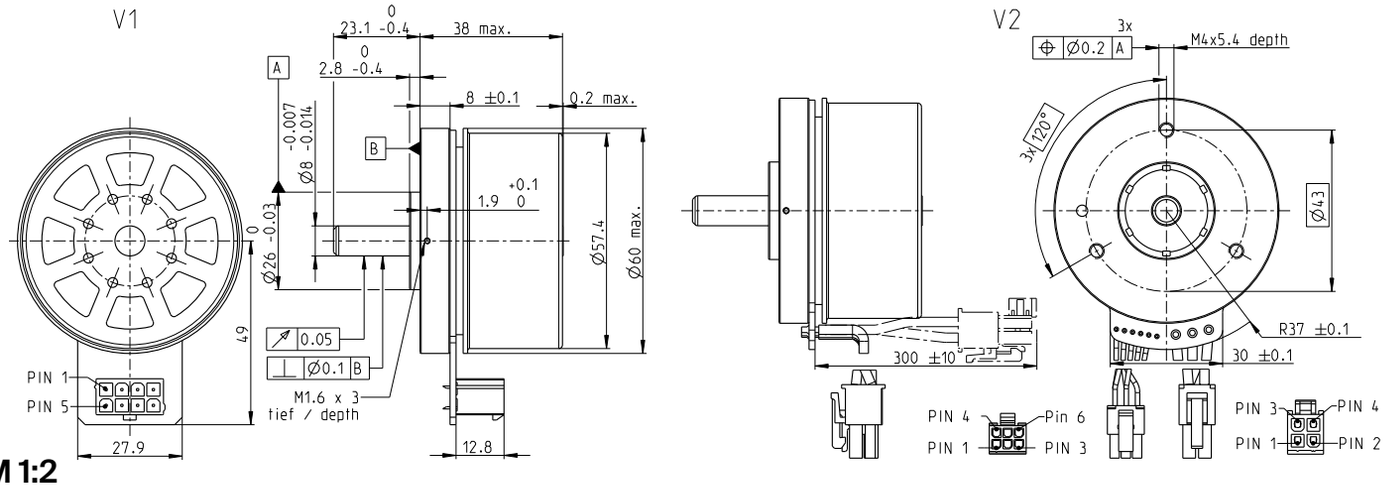

M 1:2

Stock program
Standard program
Special program (on request)

Part Numbers			
V1 with Hall sensors	625857	625858	625859
V2 with Hall sensors and cables	647693	647694	647695

Motor Data				
Values at nominal voltage				
1 Nominal voltage	V	12	24	48
2 No load speed	rpm	3760	4300	4020
3 No load current	mA	815	497	224
4 Nominal speed	rpm	2990	3480	3230
5 Nominal torque (max. continuous torque)	mNm	378	401	437
6 Nominal current (max. continuous current)	A	12*	7.25	3.63
7 Stall torque[1]	mNm	3340	4300	4870
8 Stall current	A	111	81.9	43.2
9 Max. efficiency	%	83.8	85.2	86.3
Characteristics				
10 Terminal resistance phase to phase	Ω	0.108	0.293	1.11
11 Terminal inductance phase to phase	mH	0.0911	0.279	1.28
12 Torque constant	mNm/A	30	52.5	113
13 Speed constant	rpm/V	318	182	84.8
14 Speed/torque gradient	rpm/mNm	1.14	1.01	0.837
15 Mechanical time constant	ms	9.68	8.6	9.1
16 Rotor inertia	gcm^2	810	810	810

Specifications

Thermal data

17 Thermal resistance housing-ambient		1.94 K/W
18 Thermal resistance winding-housing		1.48 K/W
19 Thermal time constant winding		16.1 s
20 Thermal time constant motor		69.9 s
21 Ambient temperature		-40...+100°C
22 Max. winding temperature		+125°C

Mechanical data (preloaded ball bearings)

23 Max. speed		6000 rpm
24 Axial play at axial load	< 12.0 N	0 mm
	> 12.0 N	0.14 mm
25 Radial play		preloaded
26 Max. axial load (dynamic)		12 N
27 Max. force for press fits (static)		170 N
(static, shaft supported)		8000 N
28 Max. radial load, 5 mm from flange		112 N

Other specifications

29 Number of pole pairs	7
30 Number of phases	3
31 Weight of motor	350 g

Values listed in the table are nominal.

Connection V1		**V2** (sensors, AWG 24)
Pin 1	Hall sensor1	Hall sensor1
Pin 2	Hall sensor 2	Hall sensor 2
Pin 3	V_{Hall} 4.5...24 VDC	Hall sensor 3
Pin 4	Motor winding 3	GND
Pin 5	Hall sensor 3	V_{Hall} 4.5...24 VDC
Pin 6	GND	N.C.
Pin 7	Motor winding 1	
Pin 8	Motor winding 2	

	V2 (Motor, AWG 16)
Pin 1	Motor winding 1
Pin 2	Motor winding 2
Pin 3	Motor winding 3
Pin 4	N.C.

Wiring diagram for Hall sensors see p. 59

Connector		**Part number**
Molex	46015-0806	43025-0600
Molex		39-01-2040

Connection cable for V1

Universal, L = 500 mm	**339380**
to EPOS4, L = 500 mm	**354045**

[1]Calculation does not include saturation effect (p. 71/178)

Operating Range

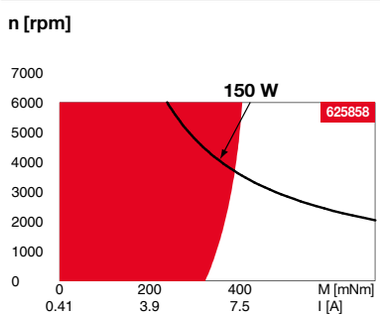

Comments

Continuous operation
In observation of above listed thermal resistance (lines 17 and 18) the maximum permissible winding temperature will be reached during continuous operation at 25°C ambient.
= Thermal limit.

Short term operation
The motor may be briefly overloaded (recurring).

Assigned power rating

maxon Modular System

Details on catalog page 46

Planetary Gearhead
∅52 mm
4-30 Nm
Page 411

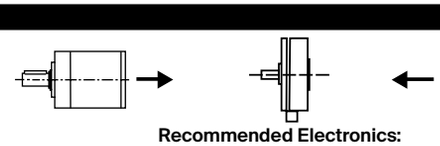

Encoder MILE
512-4096 CPT,
2 channels
Page 462

Recommended Electronics:

Notes	Page **46**
ESCON Module 50/5	501
ESCON Mod. 50/8 (HE)	502
ESCON 50/5	503
ESCON 70/10	503
DEC Module 50/5	505
EPOS4 Mod./Comp. 50/5	510
EPOS4 Mod./Comp. 50/8	511
EPOS4 Mod./Comp. 50/15	514
EPOS4 50/5	515
EPOS4 70/15	515
EPOS4 Disk 60/8	516
EPOS4 Disk 60/12	517
EPOS2 P 24/5	520

*In combination with EPOS4 positioning controllers, the connector technology limits the nominal current (max. continuous current load) is limited to 11 A.