RE 13 ∅13 mm, graphite brushes, 1.5 watt

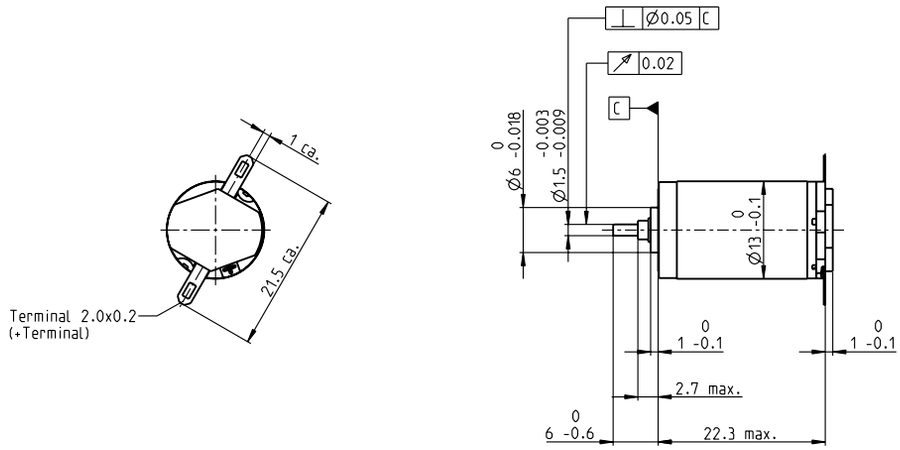

M 1:1

Stock program
Standard program
Special program (on request)

Part Numbers

Motor Data		118521	118522	118523	118524	118525	118526	118527	118528	118529	118530	118531	118532	118533	118534	118535
Values at nominal voltage																
1 Nominal voltage	V	1.2	1.5	2.4	3	3.6	4.2	4.8	6	7.2	9	12	12	15	18	20
2 No load speed	rpm	13300	13300	13700	13200	13000	13300	12300	12700	12300	12300	13300	12300	13100	14000	13300
3 No load current	mA	482	394	259	197	159	140	111	92.5	73.7	59.2	49.2	44.7	38.9	35.1	29.7
4 Nominal speed	rpm	12600	11800	10600	8520	7790	8260	7130	7480	7010	7000	8040	6940	7870	8890	8020
5 Nominal torque	mNm	0.194	0.329	0.719	1.06	1.23	1.27	1.28	1.25	1.26	1.25	1.21	1.22	1.21	1.2	1.19
6 Nominal current (max. continuous current)	A	0.72	0.72	0.72	0.72	0.659	0.588	0.481	0.39	0.316	0.252	0.199	0.186	0.157	0.139	0.119
7 Stall torque	mNm	4.07	3.25	3.33	3.19	3.3	3.56	3.26	3.25	3.16	3.12	3.28	3.01	3.23	3.51	3.22
8 Stall current	A	5.2	3.4	2.26	1.67	1.41	1.32	0.989	0.814	0.639	0.506	0.429	0.368	0.335	0.321	0.254
9 Max. efficiency	%	49	44	45	44	45	46	45	45	44	44	45	43	44	46	44
Characteristics																
10 Terminal resistance	Ω	0.231	0.441	1.06	1.8	2.56	3.18	4.85	7.37	11.3	17.8	28	32.6	44.8	56.1	78.8
11 Terminal inductance	mH	0.006	0.009	0.022	0.036	0.054	0.072	0.108	0.158	0.243	0.377	0.579	0.661	0.921	1.19	1.59
12 Torque constant	mNm/A	0.782	0.956	1.48	1.91	2.35	2.69	3.3	4	4.95	6.17	7.64	8.17	9.64	10.9	12.7
13 Speed constant	rpm/V	12200	9990	6470	5000	4070	3550	2890	2390	1930	1550	1250	1170	990	872	753
14 Speed / torque gradient	rpm/mNm	3600	4610	4660	4700	4440	4190	4250	4410	4390	4460	4570	4660	4600	4470	4680
15 Mechanical time constant	ms	13.5	14	14.1	14.2	14.1	14	14	14.1	14.2	14.2	14.3	14.3	14.3	14.2	14.4
16 Rotor inertia	gcm^2	0.358	0.291	0.29	0.288	0.303	0.318	0.315	0.306	0.308	0.304	0.3	0.293	0.297	0.303	0.294

Specifications

Thermal data

17	Thermal resistance housing-ambient	46 K/W
18	Thermal resistance winding-housing	14 K/W
19	Thermal time constant winding	5.18 s
20	Thermal time constant motor	231 s
21	Ambient temperature	-20...+85°C
22	Max. winding temperature	+125°C

Mechanical data (sleeve bearings)

23	Max. speed	16 000 rpm
24	Axial play	0.05 - 0.15 mm
25	Radial play	0.014 mm
26	Max. axial load (dynamic)	0.8 N
27	Max. force for press fits (static)	15 N
28	Max. radial load, 5 mm from flange	1.4 N

Other specifications

29	Number of pole pairs	1
30	Number of commutator segments	7
31	Weight of motor	15 g

Values listed in the table are nominal.
Explanation of the figures on page 90.

Operating Range

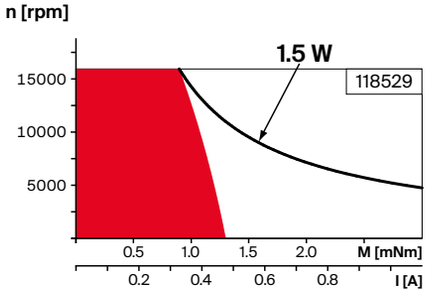

Comments

Continuous operation
In observation of above listed thermal resistance (lines 17 and 18) the maximum permissible winding temperature will be reached during continuous operation at 25°C ambient.
= Thermal limit.

Short term operation
The motor may be briefly overloaded (recurring).

Assigned power rating

Modular System

Details on catalog page 44

Motor Control
532_ESCON Module 24/2
532_ESCON 36/2 DC