35W DC-DC Non-Isolated Regulated Converter

NID35 series

■ Features :

- Economical open frame design
- Wide input range
- High efficiency up to 96%
- Remote ON / OFF control
- Compact size 2.0"×0.512"× 0.433"(SIP package)
- Protections: Short circuit / Overload / Over voltage
- -30~+85℃ wide working temperature
- Cooling by free air convection
- Comply to EN55032 ClassA without additional components
- Trimming output (optional)
- 3 years warranty

SPECIFICATION

ORDER NO.			NID35-5	NID35-12	NID35-15	NID35-24
OUTPUT	DC VOLTAGE		5V	12V	15V	24V
	CURRENT RANGE		0 ~ 3.5A	0 ~ 2.9A	0 ~ 2.4A	0 ~ 1.5A
	RATED POWER		17.5W	34.8W	36W	36W
	RIPPLE & NOISE (max.) Note.2		100mVp-p	120mVp-p	150mVp-p	200mVp-p
	LINE REGULATION Note.3		±0.5%	±0.5%	±0.5%	±0.5%
	LOAD REGULATION Note.4		±0.5%	±0.5%	±0.5%	±0.5%
	VOLTAGE TOLERANCE		±2.0%	±2.0%	±2.0%	±2.0%
	SWITCHING FREQUENCY (Typ.)		200KHz			
	EXTERNAL CAPACITANCE LOAD (max.)		100uF / 16V low ESR	68uf/25V low ESR	47uf/50V low ESR	47uf/50V low ESR
INPUT	VOLTAGE RANGE		10.5 ~ 53VDC	20 ~ 53VDC	20 ~ 53VDC	30 ~ 53VDC
	NORMAL VOLTAGE		24VDC (or 12VDC or 48VDC)	24VDC (or 48VDC)	24VDC (or 48VDC)	48VDC
	EFFICIENCY (Typ.)	24Vin	93% (12/24VDC)	95%	96%	------
		48Vin	89%	93%	94%	95%
	DC CURRENT	Full load	1700mA/12VDC	1580mA/24VDC	1620mA/24VDC	840mA/48VDC
		No load	30mA	30mA	30mA	50mA
	PROTECTION		Fuse recommended (3A)			
PROTECTION	OVERLOAD (Typ.)		120 ~ 250% rated output power			
			Protection type : Hiccup mode, recovers automatically after fault condition is removed			
	OVER VOLTAGE		6.4 ~ 7.5V	15.6~ 18V	17.5~ 21V	28~ 33V
			Protection type : Shut off o/p voltage, clamp by TVS diode			
	SHORT CIRCUIT		All output equipped with short circuit			
			Protection type : Hiccup mode, recovers automatically after fault condition is removed			
FUNCTION	REMOTE CONTROL		Power on : 1.2VDC < R.C ~ com < 12VDC or open circuit ; power off : R.C ~ com < 0.4VDC or short circuit (PIN5,6 & PIN11)			
ENVIRONMENT	SAFETY STANDARDS		EAC TP TC 004 approved			
	WORKING TEMP.		-30 ~ +85℃ (Refer to "Derating Curve")			
	WORKING HUMIDITY		20% ~ 85% RH non-condensing			
	STORAGE TEMP.		-30 ~ +105℃			
	TEMP. COEFFICIENT		±0.03% / ℃ (0 ~ 55℃)			
	VIBRATION		10 ~ 500Hz, 2G 10min./1 cycle, period for 60min. each along X, Y, Z axes			
SAFETY & EMC	SAFETY STANDARD		EN62368-1(LVD)			
	EMC EMISSION		Parameter	Standard	Test Level / Note	
			Conducted	EN55032	Class A without external components,Class B with external components	
			Radiated	EN55032	Class A without external components,Class B with external components	
	EMC IMMUNITY		Parameter	Standard	Test Level / Note	
			Radiated	EN61000-4-3	Level 2, 3V/m ; criteria A	
			EFT / Burst	EN61000-4-4	Level 2, 1KV ; criteria A	
			Surge	EN61000-4-5	Level 2, 1KV/Line-Line,criteria A	
			Conducted	EN61000-4-6	Level 2, 3V ; criteria A	
OTHERS	DIMENSION		50.8*13*11mm or 2.0"*0.512"*0.433" inch (L*W*H)			
	WEIGHT		9g;440psc/4.96Kg/0.97CUFT			
NOTE	1.All parameters are specified at normal input, rated load, 25℃ 70% RH Ambient. 2.Ripple & noise are measured at 20MHz by using a 12" twisted pair terminated with a 0.1uf & 47uf capacitor. 3.Line regulation is measured from low line to high line at rated load. 4.Load regulation is measured from 10% to 100% rated load.					

■ Connection diagram to obtain negative output voltage

Note:input voltage must be < 30VDC.

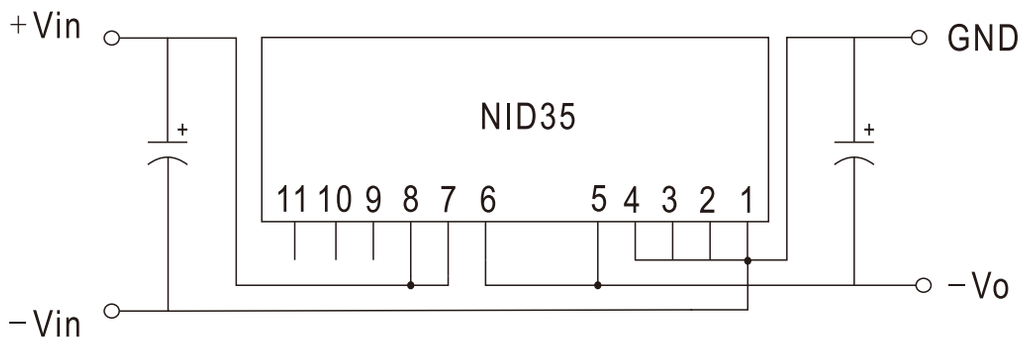

■ Derating Curve

NID-35-5

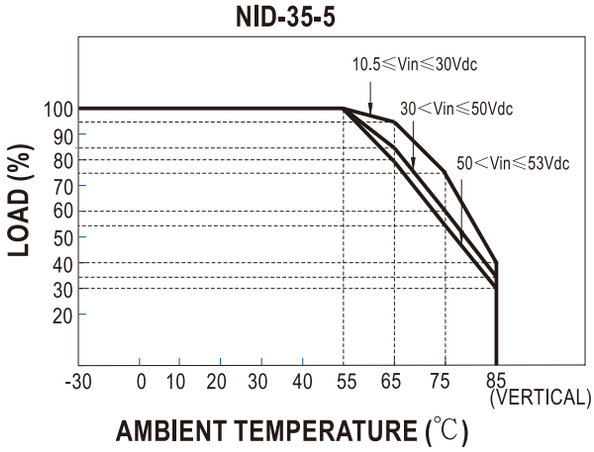

NID-35-12,15

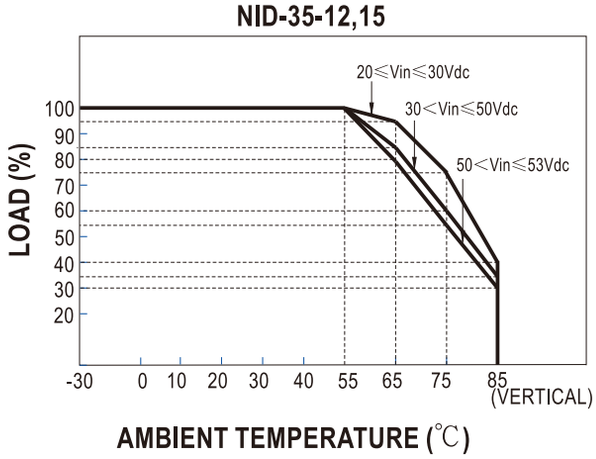

NID-35-24

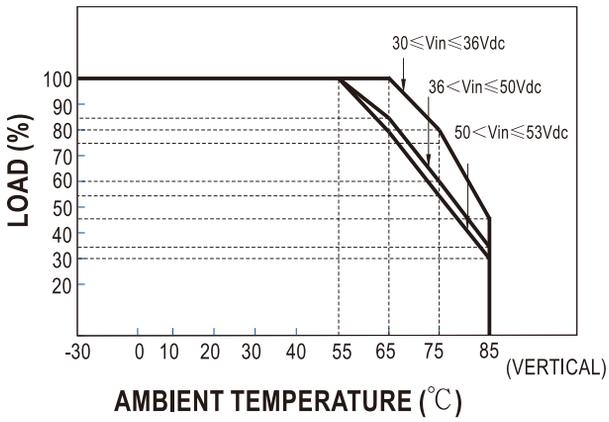

■ Mechanical Specification

Unit:mm(inch)

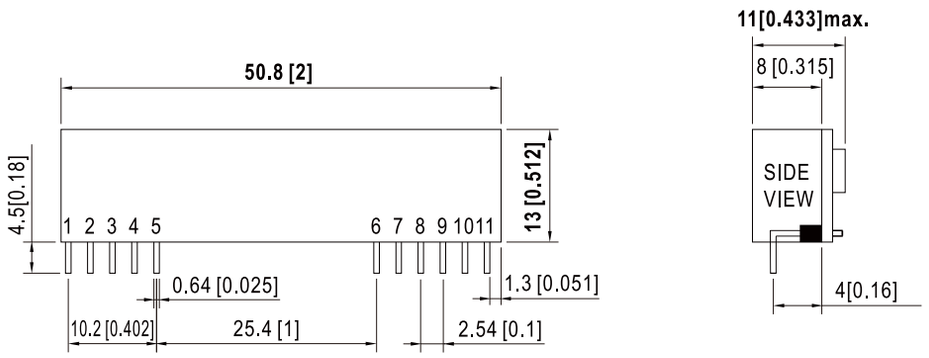

■ Pin Configuration

Pin No.	Pin_Out
1,2,3,4	+Vout
5,6	Com
7,8	+Vin
9	N.C.
10	Trim(optional)
11	R.C.

■ EMC Suggestion Circuit

※Comply to EN55032 Class A without additional componenets ,required external components to meet Class B emisssion are as below:

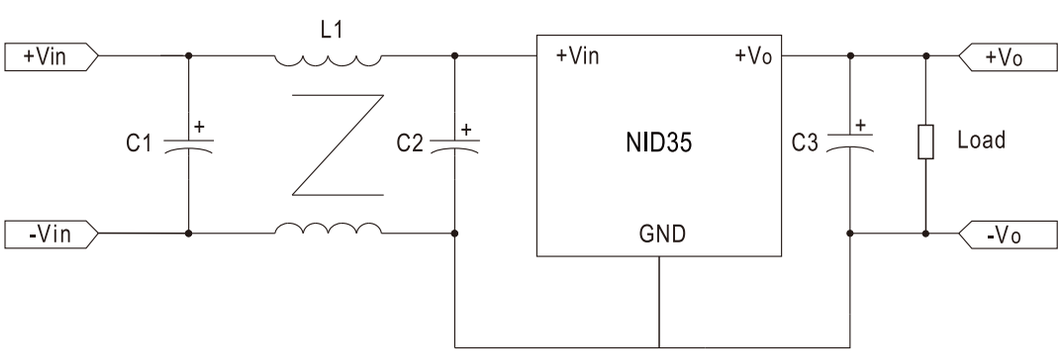

C1/C2	L1	C3
120 μF/63V	15 μH(NiZn)	22 μF/35V