MEMS Inertial Devices and Systems

美泰科技 MTMicrosystems

- ◇ Based on MEMS Process
- ◇ ±2~±200g Range
- ◇ Excellent Long-term Stability
- ◇ SPI Interface
- ◇ Low Noise
- ◇ Harsh Environment

MSA 6000D MEMS Accelerometers

Parameter	Unit	MSA6000D-02	-10	-15	-30	-50	-100	-150	-200
Range	g	±2	±10	±15	±30	±50	±100	±150	±200
Bias	mg	±10	±50	±50	±100	±100	±200	±300	±300
Bias Stability	mg	≤0.1	≤0.5	≤0.5	≤1	≤2	≤5	≤7.5	≤10
Bias Repeatability	mg	≤0.1	≤0.5	≤0.5	≤1	≤2	≤.5	≤7.5	≤10
Bias Temp. Coefficient	mg/°C	≤0.1	≤0.5	≤0.6	≤1.2	≤2.5	≤5.0	≤7.5	≤10
Scale Factor Stability	ppm	≤300	≤300	≤300	≤300	≤300	≤500	≤500	≤500
Scale Factor Repeatability	ppm	≤300	≤300	≤300	≤300	≤300	≤500	≤500	≤500
Scale Factor Temp. Coefficient	ppm/°C	≤50	≤50	≤100	≤150	≤150	≤200	≤200	≤200
Resolution	mg	0.05	0.3	0.5	1.0	2.5	5.0	7.5	10
Bandwidth	Hz	125	125	125	125	125	125	125	125
Sensitive Axis Misalignment	mrad	<10	<10	<10	<10	<10	<10	<10	<10
	%	<1	<1	<1	<1	<1	<1	<1	<1
Non-linearity	%FS Max	≤0.05	≤0.05	≤0.05	≤0.05	≤0.1	≤0.3	≤0.3	≤0.5
Resonant Frequency	kHz	1.3	2.7	3.8	4.5	5.8	8.1	10.1	11.4
Start-up Time	s	1	1	1	1	1	1	1	1
Excitation	Vdc	4.9~5.1							
Current(@5V)	mA	25							
Size	mm^3	11.43×11.43×3.8							
Packaging		Ceramic LCC28							
Interface		SPI							
Operating Temp.	°C	-40°C~+85°C(default) ; -55°C~+125°C (as request)							
Storaging Temp.	°C	-55~125°C							
Shock Resistance	g	20,000g							
All values are typical at +25°C,+5Vdc unless otherwise statement.									

◇ Applications

Integrated Navigation Systems & Inertial Guidance Systems
Flight Control & Guidance Systems
Attitude Heading Reference Systems (AHRS)
Stabilization of Antennas, Cameras & Platforms

◇ Structure (unit: mm)

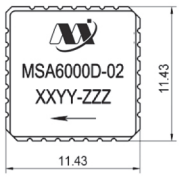

Top view
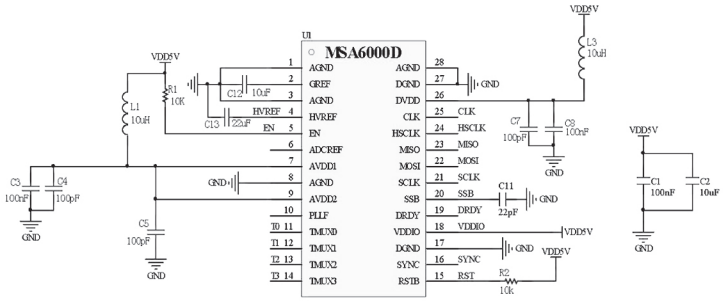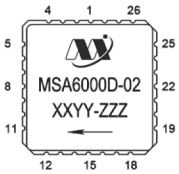
Side view